NAN REGAL

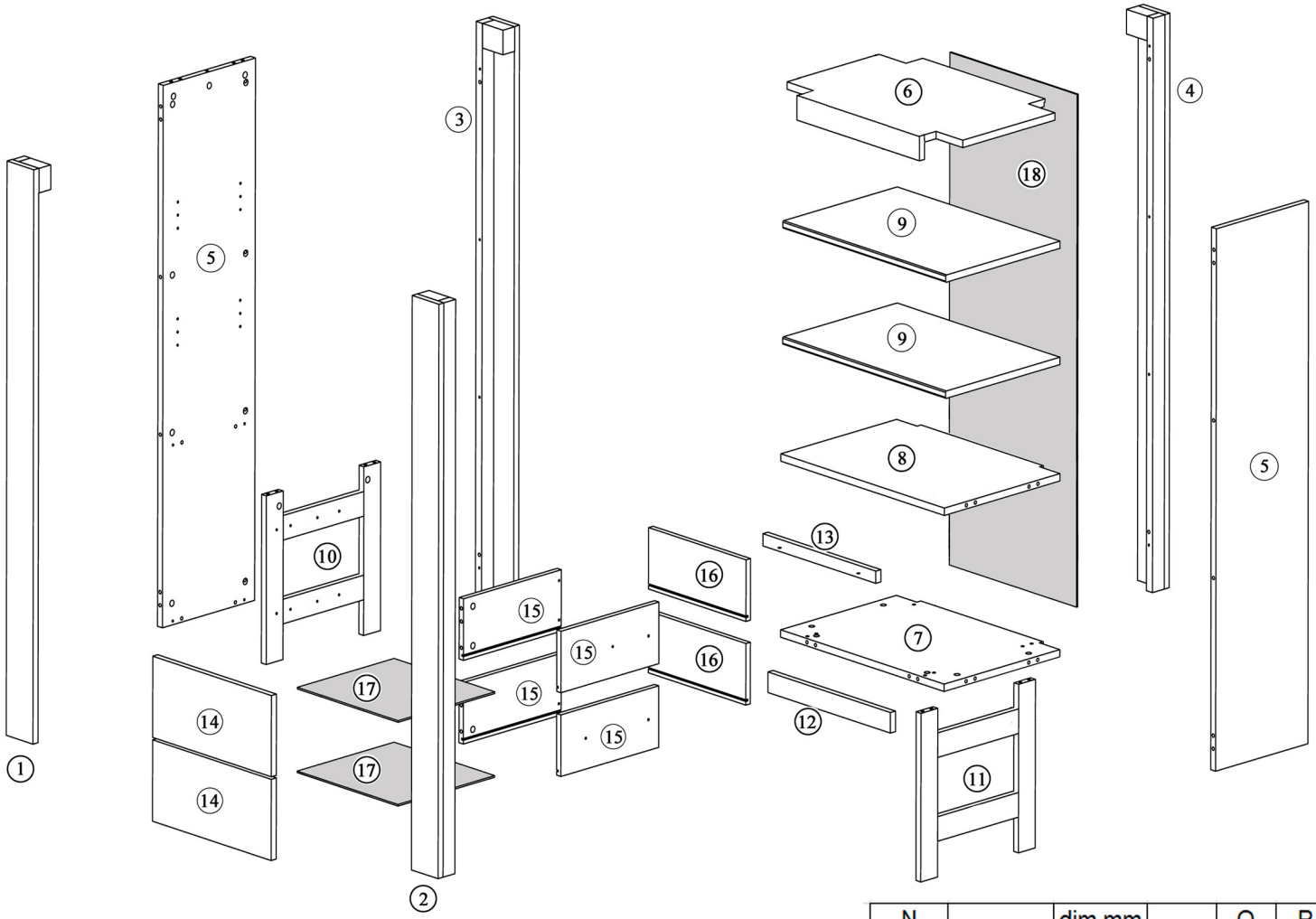

N		dim,mm		Q	P
1	1400	100	60	1	1
2	1400	100	60	1	1
3	1400	100	60	1	1
4	1400	100	60	1	1
5	1322	330	18	2	1
6	660	432	18	1	2
7	614	432	18	1	2
8	614	428	18	1	2
9	612	409	18	2	2
10	411	409	18	1	2
11	411	409	18	1	2
12	460	50	18	1	1
13	424	30	18	1	1
14	446	198	18	2	1
15	350	150	16	4	1
16	366	150	16	2	1
17	378	346	4	2	2
18	1320	478	4	1	1

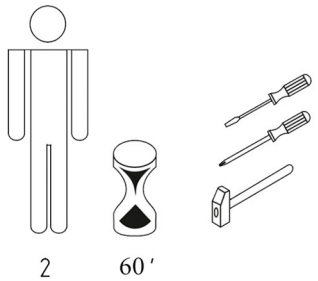

A	B	C	L	J	K	G	H	I
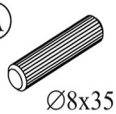 ∅8x35	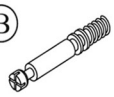		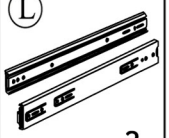	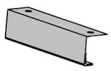			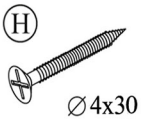 ∅4x30	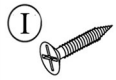 ∅3.5x16
38	44	44	2	2	50	8	10	34

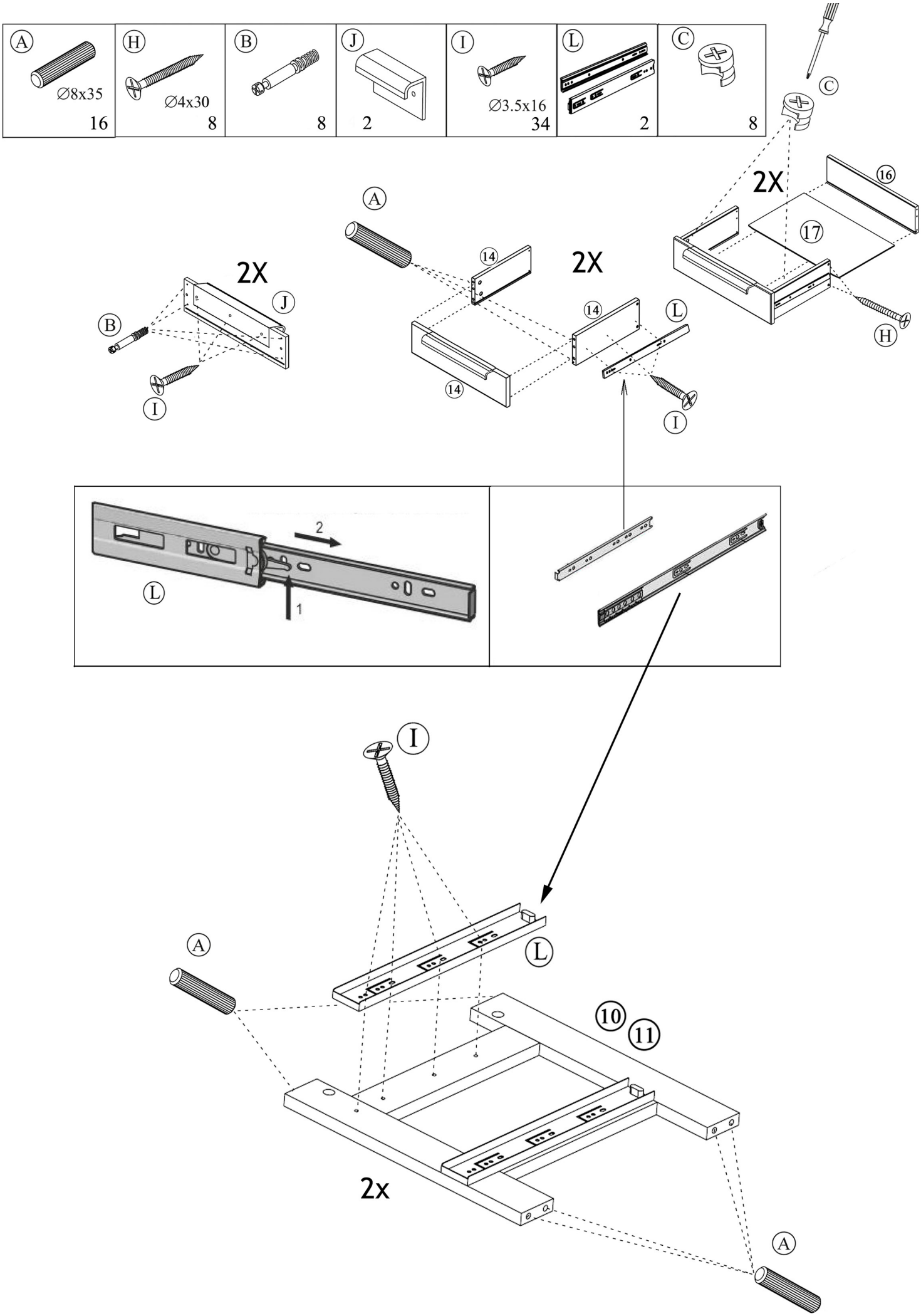
A
Ø8x35
16
H
Ø4x30
8
B
8
J
2
I
Ø3.5x16
34
L
2
C
8
C
2X
16
17
H
A
14
2X
14
L
14
I
2X
J
B
I
2
L
1
I
A
L
10
11
2x
A

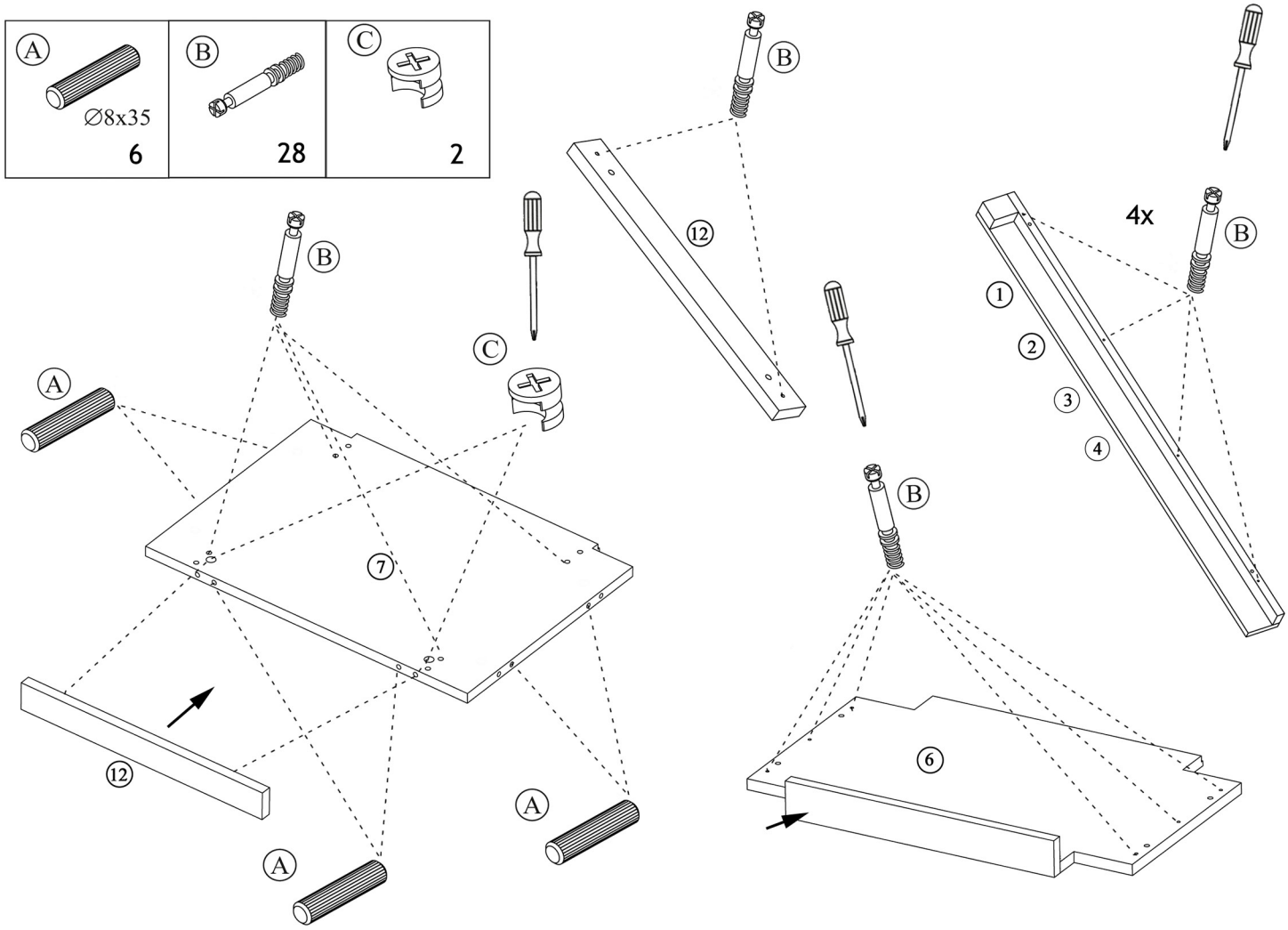
A
∅8x35
6
B
28
C
2
B
12
4x
B
1
2
3
4
B
C
A
7
B
12
6
A
A

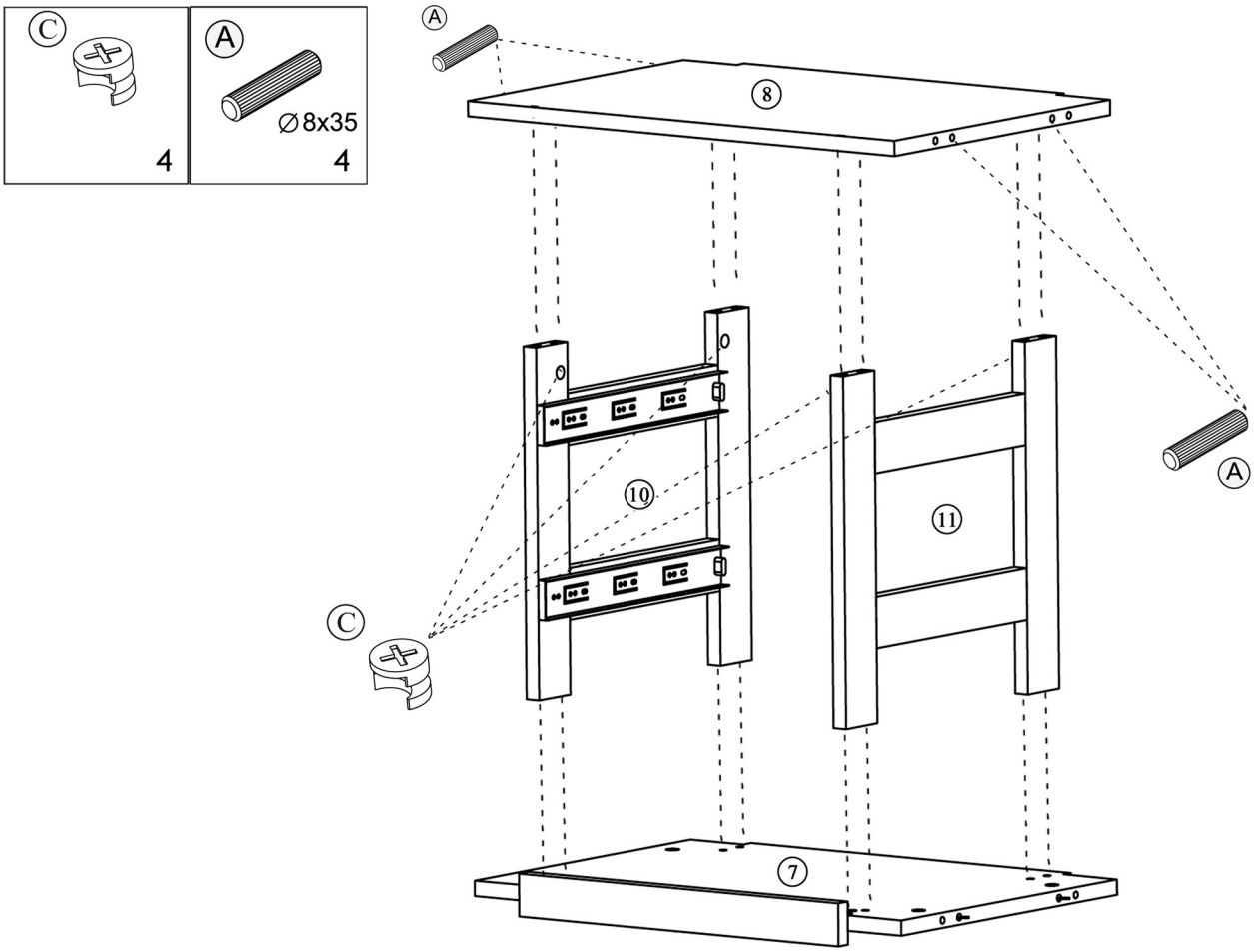
C
4
A
∅8x35
4
A
8
10
11
A
C
7

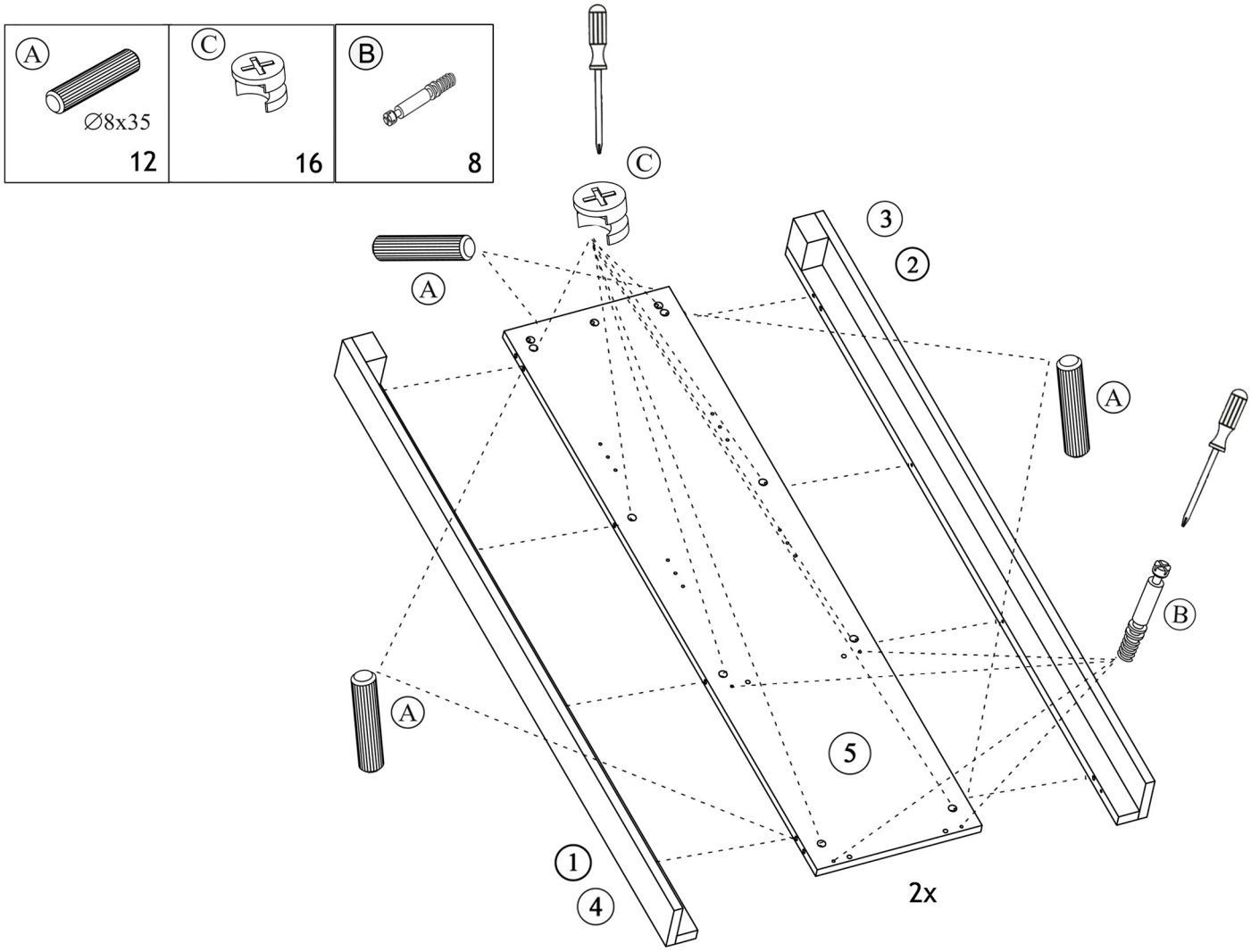
A
Ø8x35
12
C
16
B
8
C
A
3
2
A
B
A
5
1
4
2x

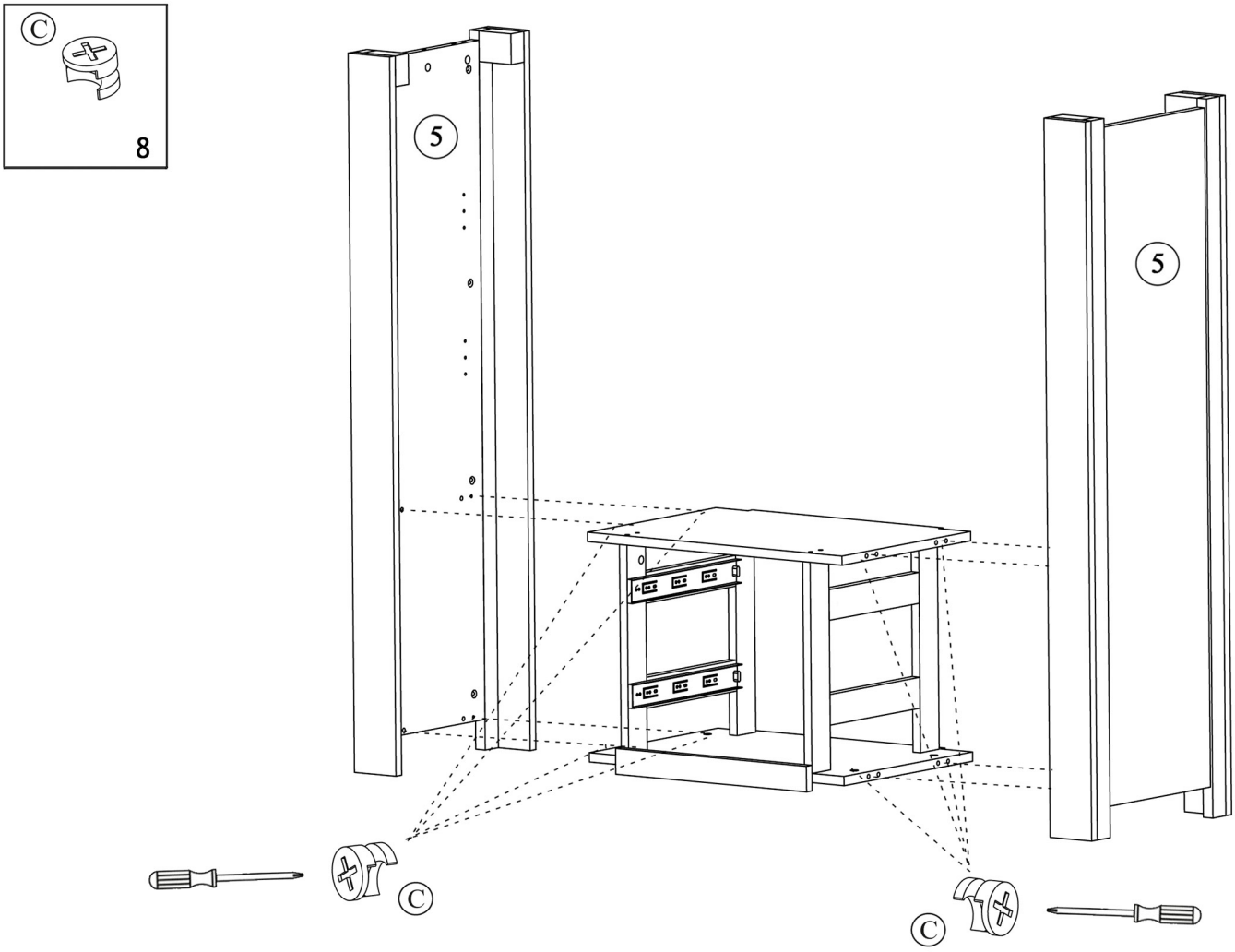
C
8
5
5
C
C

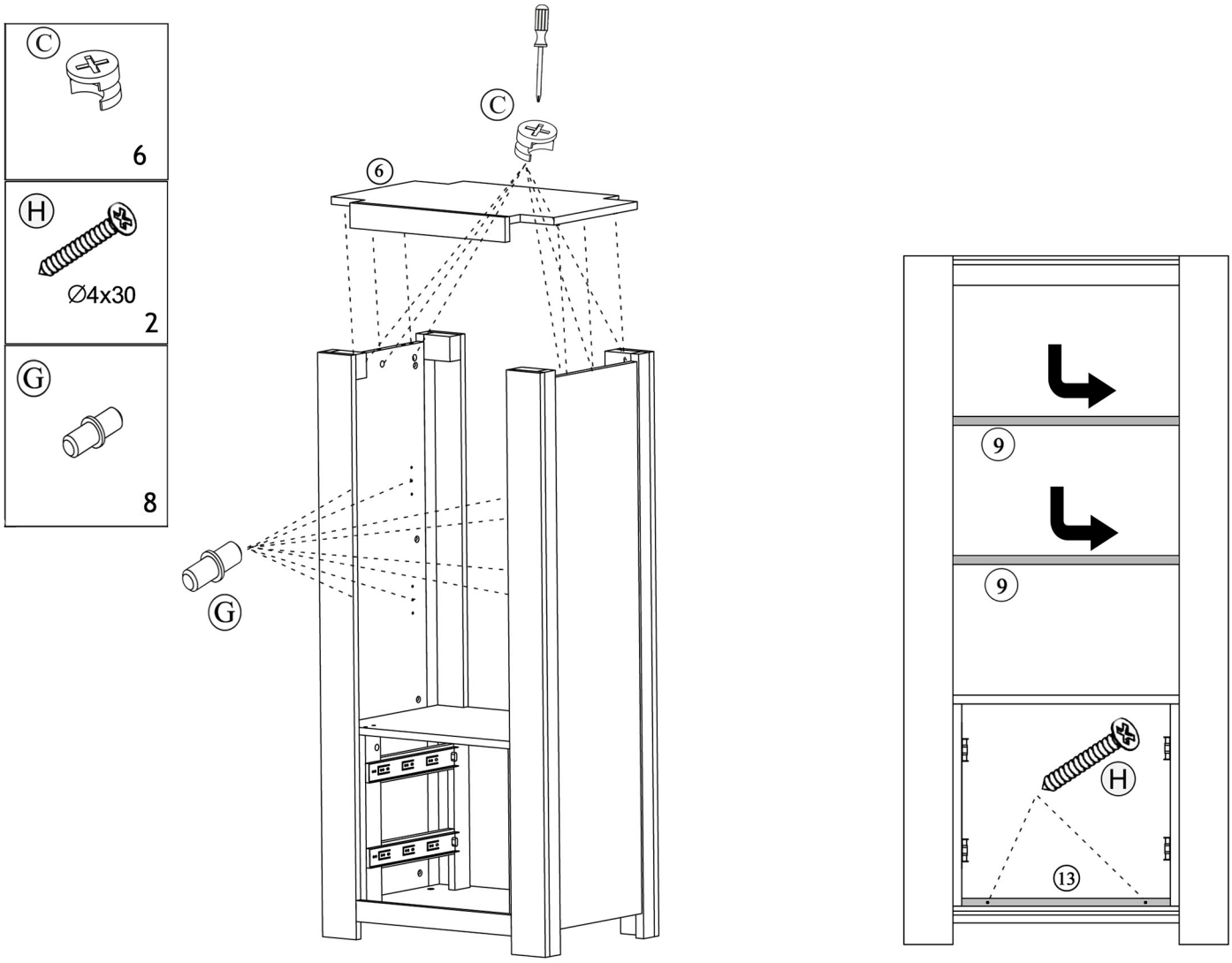
C
6
H
Ø4x30
2
G
8
C
6
G
9
9
H
13

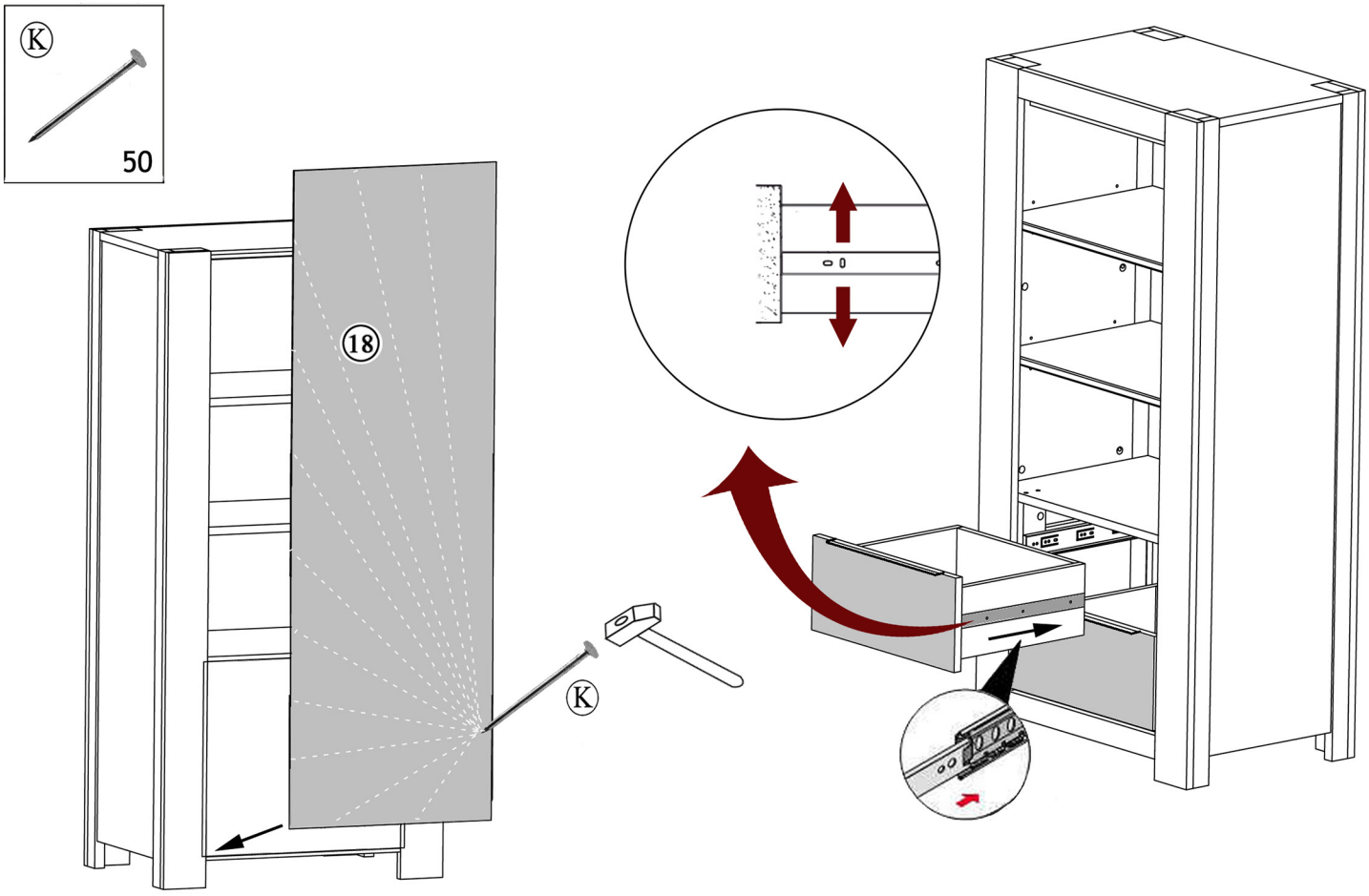
K
50
18
K